PUBLIC INFORMATION MEETING

Bridge No. 05053

ConnDOT Project No. 65-113

Harwinton
CONNECTICUT
Eastern Gateway to Litchfield County

REPLACEMENT OF SHINGLE MILL ROAD BRIDGE OVER ROCK BROOK

HARWINTON , CONNECTICUT

August 9, 2016

WMC
CONSULTING ENGINEERS

WMC CONSULTING ENGINEERS

The Town of Harwinton has retained the firm of WMC Consulting Engineers, Inc. to provide the design of the bridge, associated roadway and site improvements.

Contacts:

Jay Costello, P.E.

Vice President, WMC Consulting Engineers

John Wengell

Project Manager, WMC Consulting Engineers

Jodi-Ann O'Conner, P.E.

Liaison Engineer, CME Associates, Inc.

Priti S. Bhardwaj, P.E.

Transportation Supervising Engineer, CTDOT

Marc. P. Byrnes, E.I.T.

Project Engineer, CTDOT

Gustavo M. Melo, E.I.T.

Project Engineer, CTDOT

WMC
CONSULTING ENGINEERS

PROJECT FUNDING

- *Federal Local Bridge Program*
- *Town / State / Federal Partnership*
- *80% Federal / 20% Town*
- *Town Project with State Oversight*

WMC
CONSULTING ENGINEERS

SHINGLE MILL ROAD BRIDGE

PROJECT HISTORY

Town Funding Application	*2011*
Funding Approval	*July 2012 (FY 2013 funds)*
Consultant Selection	*July 2014*
Project Assignment Meeting	*August 2014*
Engineering Agreement	*October 2015*
Notice To Proceed	*October 2015*
PE Report	*April 2016*
Public Info Meeting	*August 2016*

WMC
CONSULTING ENGINEERS

LOCATION MAP

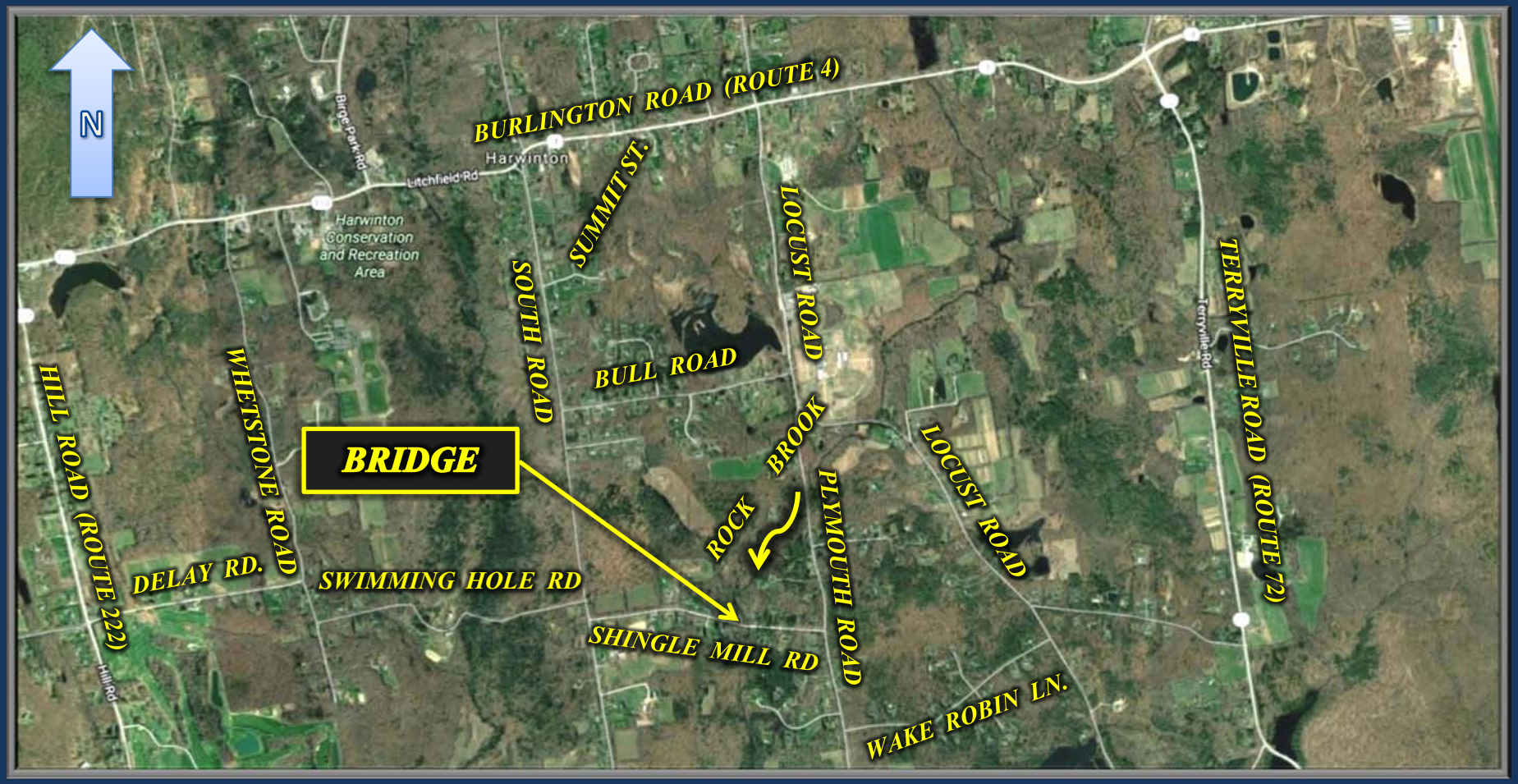

WMC
CONSULTING ENGINEERS

PURPOSE FOR THE PROJECT

Replacement of the bridge is required based on its current condition rating. According to the most recent ConnDOT Bridge Inspection Report, the existing was built in 1975 and the superstructure and substructure have condition rating of 5 and the bridge is scour critical (Rating of 3), which means the existing bridge is structurally deficient and its condition warrants replacement.

WMC
CONSULTING ENGINEERS

PROJECT GOALS

- *Replacement of the Shingle Mill Road bridge*
- *Aesthetic Improvement*
- *Minor improvements to existing drainage*
- *Minimize disturbance to neighbors and general public*
- *Complete construction in a timely manner*
- *Effectively use available funding for the project*

LOOKING EAST OVER BRIDGE

WMC
CONSULTING ENGINEERS

LOOKING WEST OVER BRIDGE

WMC
CONSULTING ENGINEERS

EXISTING BRIDGE

UPSTREAM VIEW

DOWNSTREAM VIEW

WMC
CONSULTING ENGINEERS

EXISTING BRIDGE

EAST ABUTMENT UPSTREAM FACE

WEST ABUTMENT UPSTREAM FACE

WMC
CONSULTING ENGINEERS

EXISTING BRIDGE

WEST ABUTMENT DOWNSTREAM FACE

EAST ABUTMENT DOWNSTREAM FACE

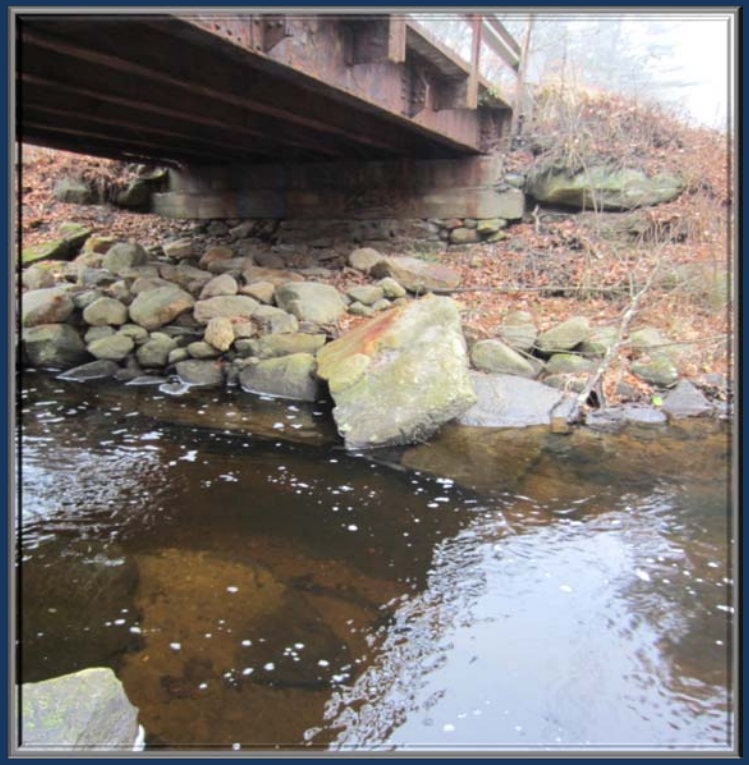

WMC
CONSULTING ENGINEERS

EXISTING BRIDGE

FACIA GIRDER CONDITIONS
UPSTREAM FACE

FACIA GIRDER CONDITIONS
DOWNSTREAM FACE

WMC
CONSULTING ENGINEERS

ALTERNATIVE 1

Rehabilitation - Prestressed Concrete Deck Units

Pros:

- Lowest projected construction cost of the alternatives
- Maintains natural stone appearance

Cons:

- Installation of scour protection for westerly abutment could reduce hydraulic capacity and costs associated with installation could escalate from the uncertainty of existing scour conditions.
- The substructure will continue to deteriorate and need replacement in the near future
- Shortest projected life span of all alternatives
- Roadway width is inadequate and unable to support two-way traffic

Cost:

- The cost of construction for the year 2018 is approximately $550,000

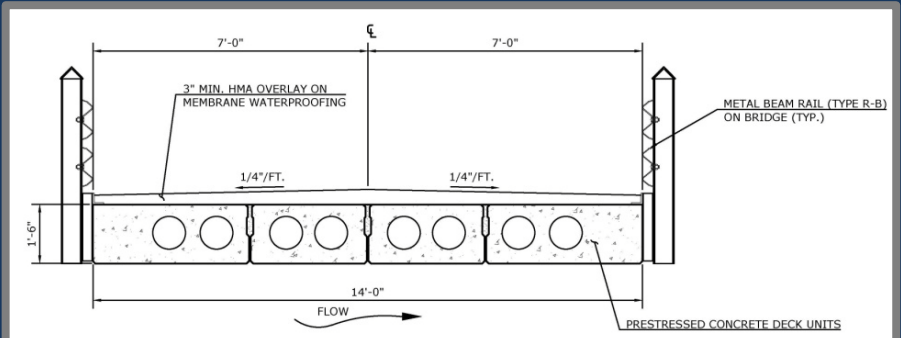

ALTERNATIVE 1 - BRIDGE SECTION

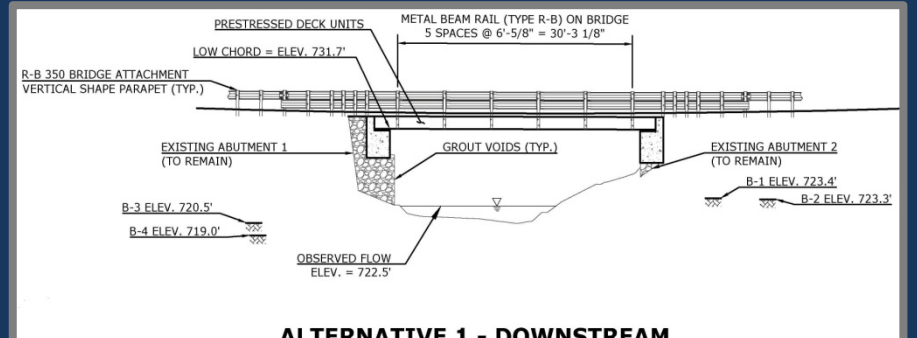

ALTERNATIVE 1 - DOWNSTREAM BRIDGE ELEVATION

WMC CONSULTING ENGINEERS

ALTERNATIVE 2

Replacement - Prestressed Concrete Deck Units

Pros:

- Replacement includes two ten foot travel lanes across the bridge allowing for bi-directional traffic
- Clear span (open bottom) structure type is preferred by DEEP Fisheries
- Removal of existing fill material along easterly abutment is deemed to be an environmental enhancement to the channel and favorable by DEEP Fisheries

Cons:

- Highest projected construction cost of the replacement alternatives
- Does not accommodate addition of future utilities under the superstructure
- Longest construction time of the replacement alternatives evaluated due to additional work in the construction of new concrete abutments

Cost:

- The cost of construction for the year 2018 is approximately $1,510,000

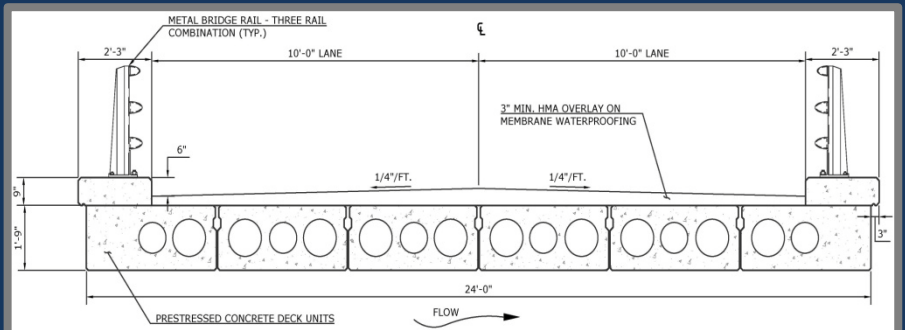

ALTERNATIVE 2 - BRIDGE SECTION

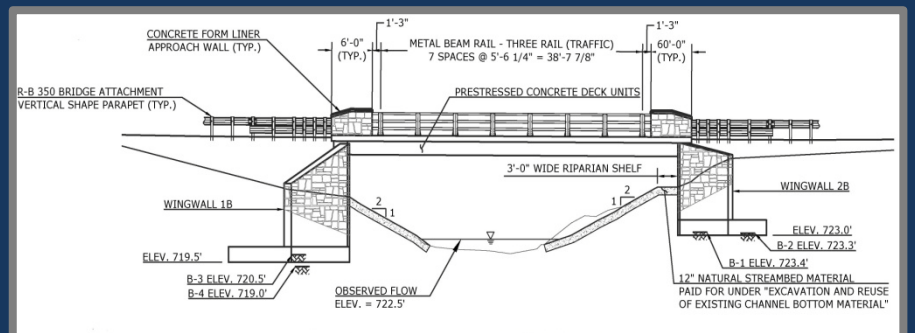

ALTERNATIVE 2 - DOWNSTREAM BRIDGE ELEVATION

WMC CONSULTING ENGINEERS

SELECTED – ALTERNATIVE 3

Replacement - 49' Precast Concrete Arch

Pros:

- Replacement includes two ten foot travel lanes across the bridge allowing for bi-directional traffic
- Lowest projected construction cost of the replacement alternatives evaluated
- Shortest required construction time of the replacement alternatives evaluated
- Clear span (open bottom) structure type is preferred by DEEP Fisheries
- Removal of existing fill material along easterly abutment is deemed to be an environmental enhancement to the channel and favorable by DEEP Fisheries

Cons:

- Does not accommodate the addition of future utilities under the superstructure

Cost:

- The cost of construction for the year 2018 is approximately $1,420,000
- Funding will be 80% Federal funds and 20% Town funds (Federal: $1,136,000 ; Town:$284,000)

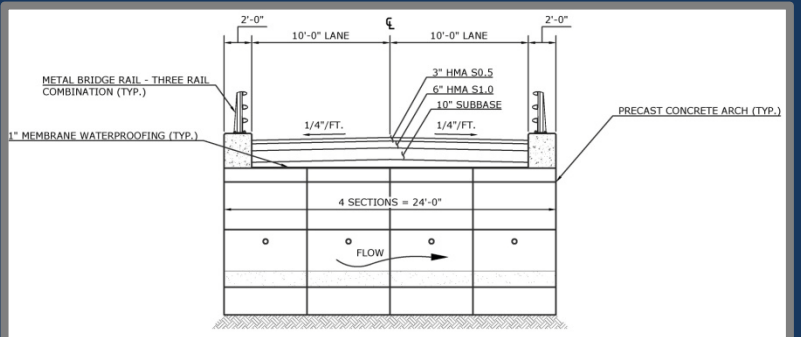

ALTERNATIVE 3 - BRIDGE SECTION

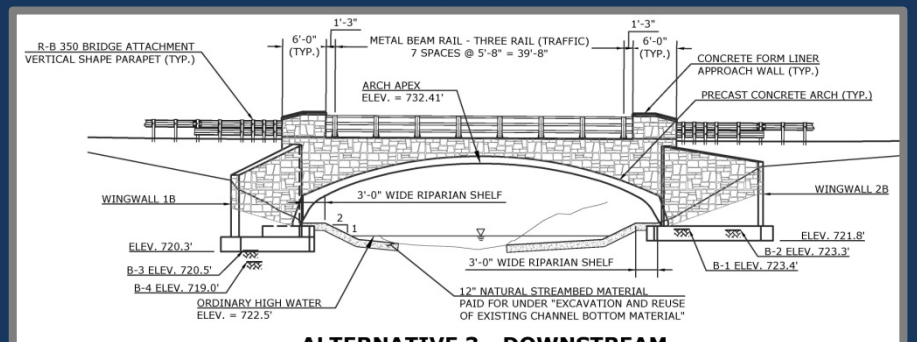

ALTERNATIVE 3 - DOWNSTREAM BRIDGE ELEVATION

WMC CONSULTING ENGINEERS

SELECTED - ALTERNATIVE 3

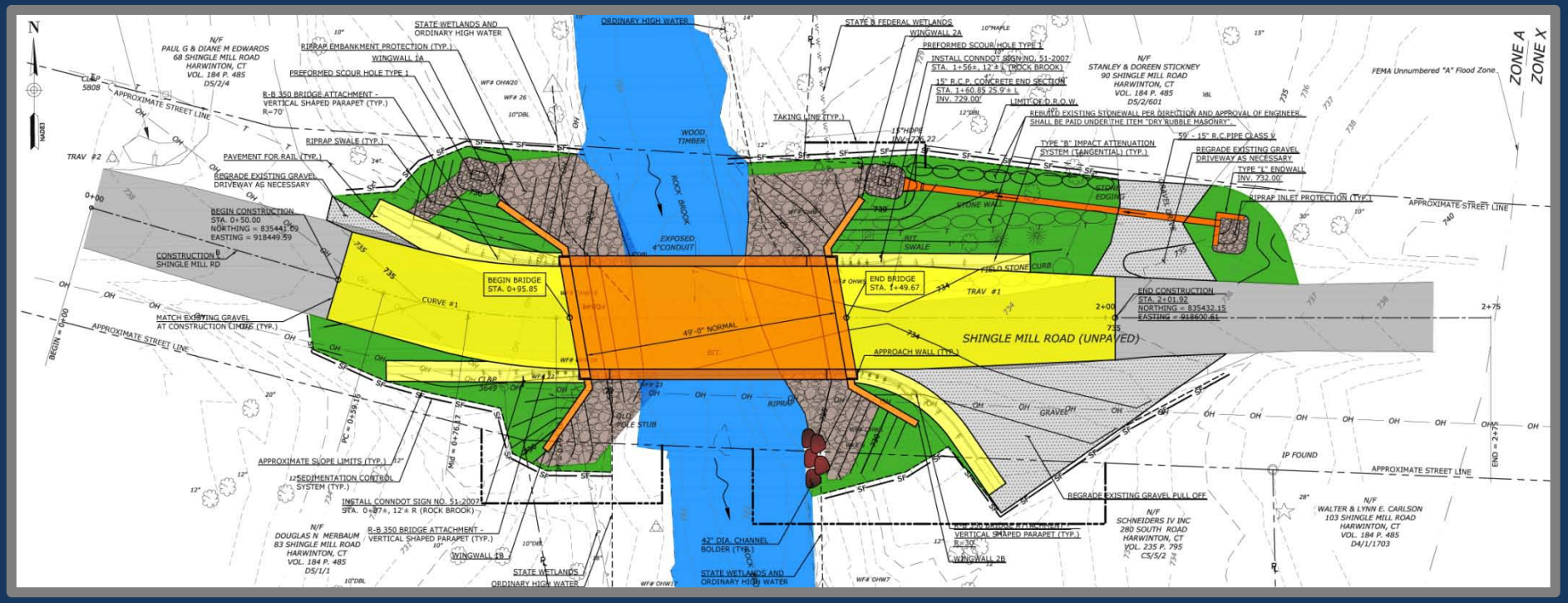

Roadway Plan

WMC
CONSULTING ENGINEERS

SELECTED - ALTERNATIVE 3

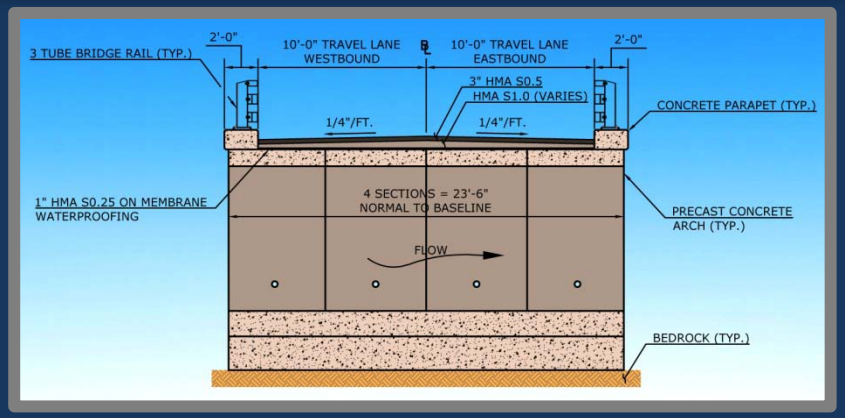

Typical Bridge Section

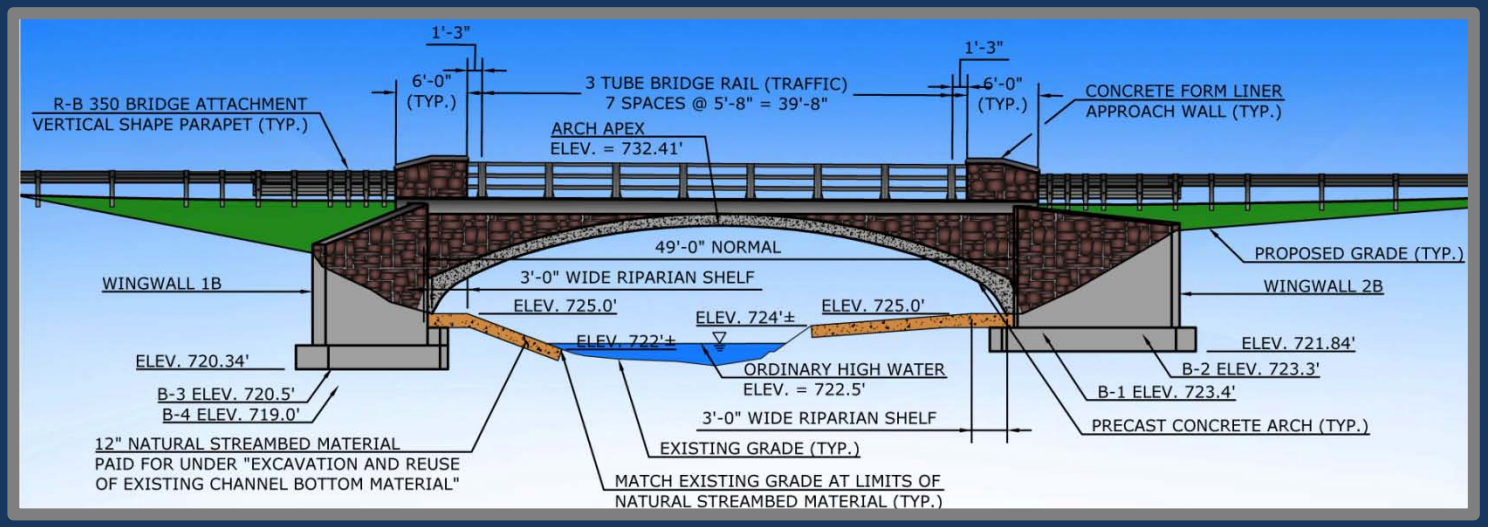

Bridge Elevation

WMC
CONSULTING ENGINEERS

SELECTED - ALTERNATIVE 3

Reasons For Selection:

- *Two ten foot travel lanes across the bridge allowing for bi-directional traffic*
- *Lowest projected construction cost*
- *Shortest required construction time*
- *Clear span (open bottom) structure type is preferred by DEEP Fisheries*

Proposed Construction Includes:

- *49' x 8'7" precast concrete arch*
- *Concrete bridge abutments and precast concrete wingwalls*
- *Concrete approach walls at both ends of the bridge*
- *Bridge rail in between the approach walls*
- *New guide rail and guide rail anchors*
- *Full depth reconstruction of pavement with project limits*
- *Minor improvements to existing drainage*
- *Minimizing of easements and land acquisitions*
- *Geometry will essentially remain the same*
- *Improve safety of approach roadways*
- *Road to be closed to traffic with a detour during construction*

WMC
CONSULTING ENGINEERS

CONSTRUCTION DETOUR

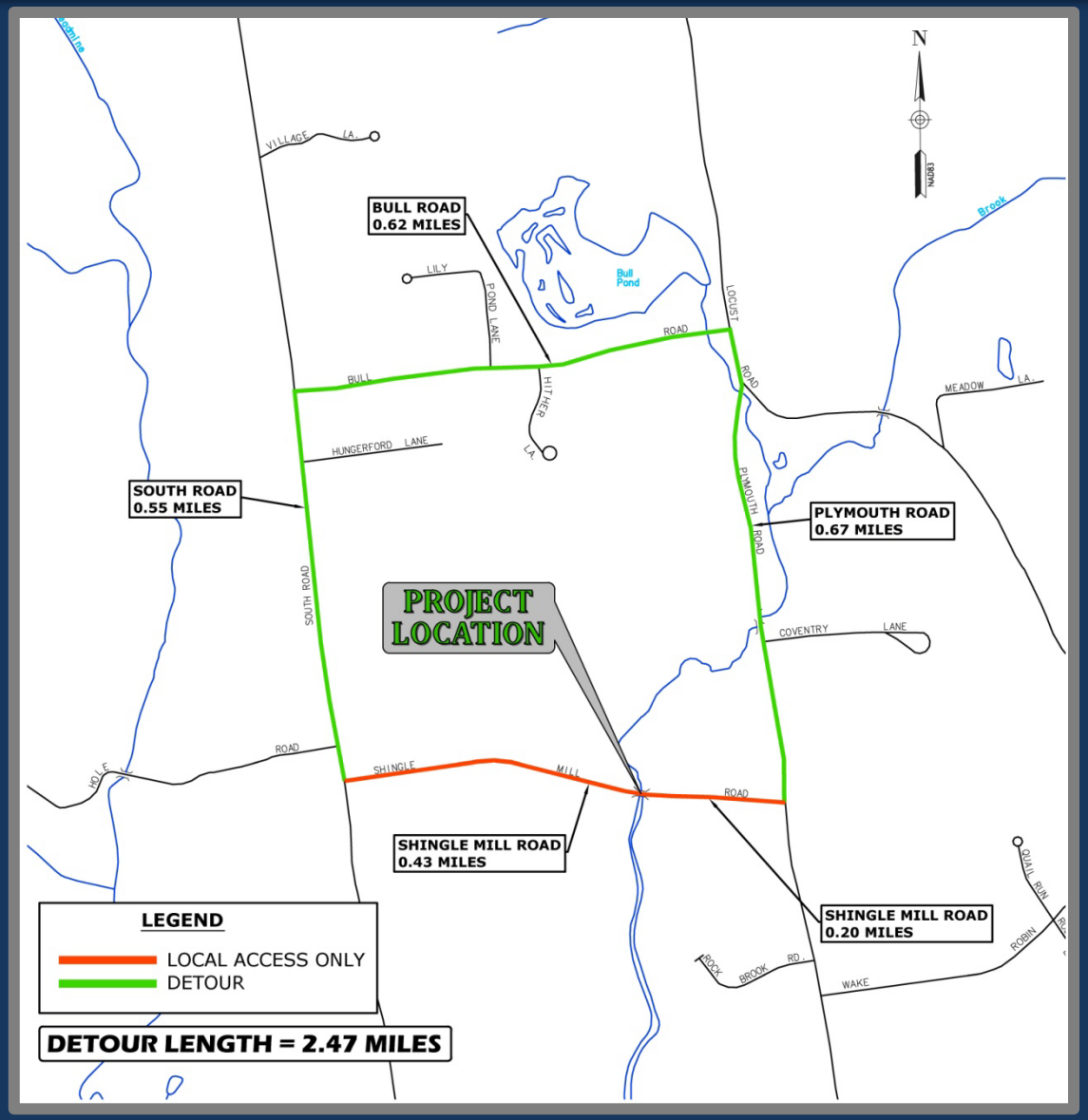

WMC
CONSULTING ENGINEERS

ENVIRONMENTAL CONSIDERATIONS

- *No known contaminated soils within project limits*
- *No known hazardous materials within project limits*
- *Best management practices will be used to handle sedimentation control*
- *Inland wetlands/regulated area impacts will be kept to a minimum*
- *Disturbed areas during construction will be restored upon completion*
- *Permits required:*

  Category I ACOE

  Town IWWC

  State Flood Management Certification

WMC
CONSULTING ENGINEERS

RIGHTS-OF-WAY

- *Impacts to private properties will be kept to a minimum*
- *Temporary construction easements required for the bridge and roadway improvements*
- *Permanent easements required for the maintenance of the bridge and retaining walls*

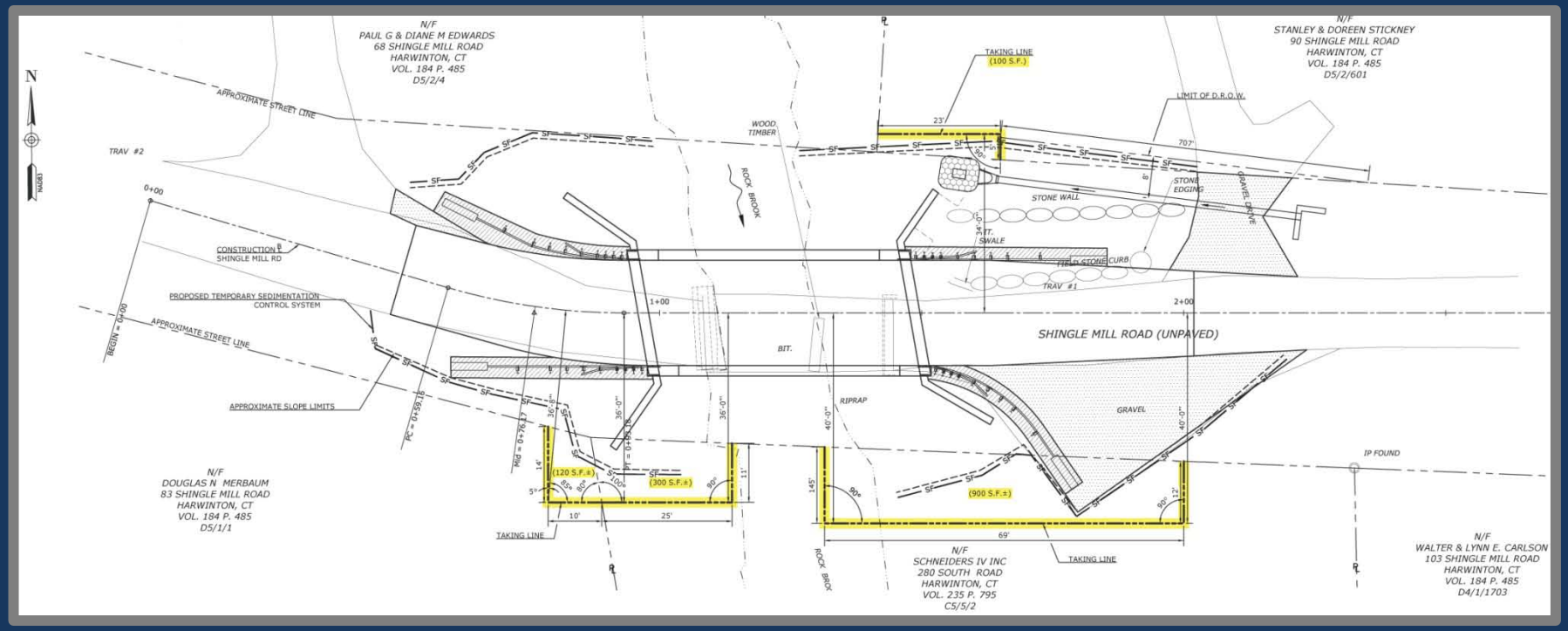

WMC
CONSULTING ENGINEERS

PROJECT COST

- *The cost of construction for the year 2018 is approximately $1,420,000*
- *Funding will be 80% Federal funds and 20% Town funds*
    - *Federal: $1,136,000*
    - *Town: $284,000*

PROJECT SCHEDULE

- *Advertising for construction: September 2017*
- *Start of construction: April 2018*
- *Duration of construction: Approx. 8 months*

PUBLIC UTILITIES

- *Overhead utility wires relocated as required*
- *Coordination with utility companies will be conducted during the design process*
- *Notification of the proposed improvements after approval of preliminary design*

WMC
CONSULTING ENGINEERS

CONTACT INFORMATION

Town of Harwinton

Michael R. Criss, First Selectman
Harwinton Town Hall
100 Bentley Drive
Harwinton, CT 06791
1stSelectman@harwinton.us
860-485-9051 ext. 101

CME Associates, Inc.

Jodi-Ann O'Connor, P.E.
Federal Local Bridge Program Coordinator
333 East River Drive, Suite 400
East Hartford, CT 06108
joconnor@cmeengineering.com
860-290-4100 ext. 1102

WMC Engineers

John Wengell
Project Manager
87 Holmes Road
Newington, CT 06111
jawengell@wmcengineers.com
860-667-9624

CT Dept. of Transportation

Priti S. Bhardwaj, P.E.
Transportation Supervising Engineer
Federal Local Bridge Program
2800 Berlin Turnpike
P.O. Box 317546
Newington, CT 06131-7546
priti.bhardwaj@ct.gov
860-594-3311

CT Dept. of Transportation

Marc P. Byrnes, E.I.T.
Project Engineer
Federal Local Bridge Program
2800 Berlin Turnpike
P.O. Box 317546
Newington, CT 06131-7546
Marc.Byrnes@ct.gov
860-594-3489

CT Dept. of Transportation

Gustavo M. Melo, E.I.T.
Project Engineer
Federal Local Bridge Program
2800 Berlin Turnpike
P.O. Box 317546
Newington, CT 06131-7546
Gustavo.Melo@ct.gov
860-594-3311

WMC
CONSULTING ENGINEERS

WMC PREVIOUS BRIDGE PROJECTS

BRIDGE DATA SHEET

BELL STREET BRIDGE over SALMON BROOK

GLASTONBURY, CONNECTICUT

ORIGINAL STRUCTURE: The original bridge was built circa 1938. The bridge was a single span, simply supported cast-in-place concrete slab, about 24" thick. The slab has a ½" bituminous concrete surface with no known membrane. The bridge has a total length of approximately 26 feet and a clear span between the abutment walls at the abutment seat of approximately 22 feet. The overall width of the bridge to the outside faces of the parapets is 26 feet.

NEW STRUCTURE: Pre-cast concrete arch on concrete abutments with footings founded on bedrock. Form lined wingwalls & approach walls with concrete caps. Brushed aluminum bridge guardrail, metal beam approach guardrail.

LENGTH: 45.5'

WIDTH: 58'

APPROACHES: 150'

SUPERSTRUCTURE: Precast Concrete Arch

SUBSTRUCTURE: Footings founded on Bedrock

Cost: $ 2,265,237.78

PERMITS / REVIEWS: ACOE Category I Permit, DEP Flood Management Certification
Inland wetlands and watercourses agency application

SPECIAL CONCERNS: The arch was skewed approximately 34 degrees to the proposed roadway baseline. In the vicinity of the structure, the proposed roadway profile was raised approximately 2 to 3 feet. The total width of the arch measured parallel with the centerline of the brook is approximately 58 feet. Extensive utility work was required. Bike trail incorporated.

PROJECT SPECIFICATIONS:

EXCAVATION:	EARTH:	2,468 C.Y.
	ROCK:	216 C.Y.
SUBSTRUCTURE:	CONCRETE:	232 C.Y.
	REINFORING:	31,152 lb.
SUPERSTRUCTURE:	CONCRETE:	40 C.Y.
	REINFORCING:	9,734 lb.
ROADWAY:	614', Metal bridge rail (Type R-B 350)	

FEATURES: The upstream face of the proposed crossing was moved approximately 15 feet downstream of the existing bridge to improve the horizontal geometry of the roadway.

CONSTRUCTION COMPLETION: FALL 2010

BRIDGE DATA SHEET

DISH MILL ROAD BRIDGE over HOWELL'S BROOK

HARTLAND, CONNECTICUT

ORIGINAL STRUCTURE:

NEW STRUCTURE: Precast concrete arch culvert (Conspan), steel backed timbre guide rail, reinforced concrete stepped Footings founded on bedrock, New England drystack form liner surface treatment on wingwalls and spandrel walls.

LENGTH: 24'

WIDTH: 34'-3"

APPROACHES:

SUPERSTRUCTURE:

SUBSTRUCTURE:

COST: $ 531,299.17

PERMITS / REVIEWS:

SPECIAL CONCERNS:

PROJECT SPECIFICATIONS:

EXCAVATION:	EARTH:	1,555 C.Y.
	ROCK:	N/A
SUBSTRUCTURE:	CONCRETE:	328 C.Y.
	REINFORCING:	20,268 Lbs.
SUPERSTRUCTURE:	CONCRETE:	N/A
	REINFORING:	2,646 Lbs.
ROADWAY:	770', Timber Guide Rail	

FEATURES: Howell's Brook Pond Dam is approximately 150 feet upstream of bridge. Features form liner concrete wingwalls and fascia with a precast concrete arch. Additionally, the bridge features steel backed wood guide rail.

CONSTRUCTION COMPLETION: Spring 2000

WMC
CONSULTING ENGINEERS

WMC PREVIOUS BRIDGE PROJECTS

BRIDGE DATA SHEET

WILSON ROAD over GULF STREAM

LITCHFIELD, CONNECTICUT

ORIGINAL STRUCTURE: The original bridge was built in 1956. The structure consists of an asphalt coated corrugated metal pipe arch supported on concrete stub abutments. The bridge has a simple span with a maximum clear span of approximately 18 feet and a rise of approximately 9.2 feet. The reinforced concrete wingwalls are monolithic with the abutments.

NEW STRUCTURE: Precast concrete arch sections, set on cast-in-place concrete footings with knee walls. The arch sections have cast-in-place concrete spandrel walls, were covered with a waterproofing membrane. Standard cast-in-place reinforced concrete flared wingwalls were used at all four corners of the substructure.

LENGTH: 20'

WIDTH: 26' (35')

APPROACHES: 60'

SUPERSTRUCTURE: Precast Conspan Arches

SUBSTRUCTURE: Cast-in-place footings & wingwalls

COST: $ 536,798.84

PERMITS / REVIEWS: Inland Wetland and Watercourse, Planning and Zoning Notification, State: DEP Flood Management certification, Federal: ACOE General Permit

SPECIAL CONCERNS: Permanent and temporary easements and rights, Utility Impacts: CL&P poles, telephone, electric, and cable TV

PROJECT SPECIFICATIONS:

EXCAVATION:	EARTH:	2,500 c.y.
	ROCK:	9 c.y.
SUBSTRUCTURE:	CONCRETE:	323 c.y.
	REINFORCING:	21,452 lb
SUPERSTRUCTURE:	CONCRETE:	N/A
	REINFORCING:	2,239 lb
ROADWAY:	380 Feet, Timber Guide Rail	

FEATURES: Timber Guide Rail

CONSTRUCTION COMPLETION: Summer 2001

BRIDGE DATA SHEET

DIAMOND HILL ROAD over SAUGATUCK RIVER

REDDING, CONNECTICUT

ORIGINAL STRUCTURE: The original bridge was built in 1955. The bridge consisted of three (6 foot) diameter corrugated steel pipes (culverts) with stone masonry parapet walls (side walls) and wingwalls. The bridge carries a two lane roadway, providing a width of approximately 17.4 feet curb-to-curb and, including the parapets, a total width of approximately 20.7 feet.

NEW STRUCTURE: Precast concrete arch culvert (Conspan), steel backed timber guide rail, reinforced concrete stepped footings founded on bedrock, New England dry stack form liner surface treatment on wingwalls and spandrel walls, and tone approach walls.

LENGTH – 26'

WIDTH – 26'

APPROACHES – 250'

SUPERSTRUCTURE - Precast Concrete Span Arches

SUBSTRUCTURE - New abutments founded on bedrock

COST - $331, 113.00

PERMITS / REVIEWS: Connecticut Inland Wetlands & Watercourses Application, Flood Management Certification, Part of the federal local bridge program

SPECIAL CONCERNS: Overhead Utilities, Trees to be removed at project site

PROJECT SPECIFICATIONS:

EXCAVATION	EARTH:	399 C.Y.
	ROCK:	216 C.Y.
SUBSTRUCTURE	CONCRETE:	N/A
	REINFORING:	7,046 Lbs.
SUPERSTRUCTURE	CONCRETE:	91 C.Y.
	REINFORCING:	1,343 Lbs.
ROADWAY		69' - Timber guiderail

FEATURES: Dam spillway upstream of bridge.

CONSTRUCTION COMPLETION: FALL 2001

WMC
CONSULTING ENGINEERS